Weighting Function Integrated in Grid-interfacing Converters for Unbalanced Voltage Correction

Fei Wang, Jorge L. Duarte, Marcel A. M. Hendrix

Department of Electrical Engineering
Eindhoven University of Technology
5600 MB Eindhoven, The Netherlands
Phone number: +0031 40 2473566, e-mail: f.wang@tue.nl

1. Brief introduction

The effects of voltage unbalance problems are quite severe for electrical machines, power electronic converters, and drives [1]. Active compensators are especially applied for voltage unbalance mitigation of the utility grid by regulating reactive power or, to maintain a balanced voltage at the load terminals, by injecting series compensated voltages [2][3]. In this paper a weighting function for voltage unbalance correction is proposed to be integrated into the control of distributed grid-interfacing systems. The correction action can help decrease the negative-sequence voltage at the point of connection with the grid. Based on the voltage unbalance factor and system power capacity, the interfacing converter delivers a small amount of negative-sequence current to the grid and helps correcting the negative-sequence voltage. As a practical example, a three-phase grid-interfacing converter servicing sensitive loads with distributed sources is employed to integrate this additional function.

Key words: Weighting function, unbalanced voltage, grid-interfacing converter, distributed generation.

2. Voltage Unbalance Correction

A. Negative-sequence Equivalent Model

Fig.1 shows the structure of a three-phase four-wire grid-interfacing system being connected to the utility grid at the POC. Some other loads are also present at the POC. With the theory of symmetric decomposition for three phase systems, an equivalent circuit model for sequence voltages can be derived. The diagram for negative-sequence components is shown in Fig. 2. Voltage V_{gn} and V_{sn} are the negative-sequence voltages of the utility grid and POC, respectively. Current I_{sn} is the negative-sequence current from the grid-interfacing system.

B. Negative-sequence Voltage Correction

The idea is to induce controllable voltage on the grid impedances by regulating the negative-sequence

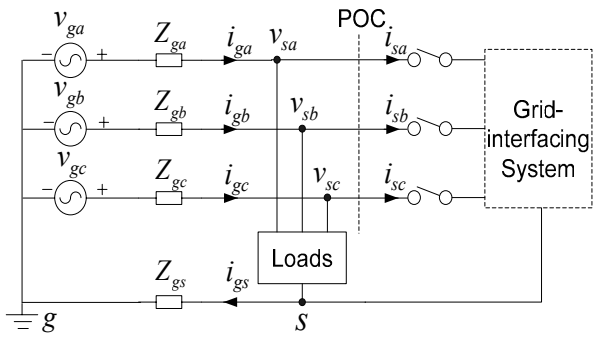

Fig. 1. Grid-interfacing system at POC.

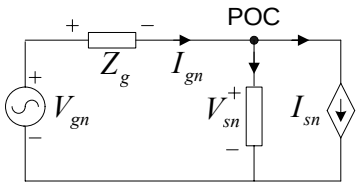

Fig. 2. Equivalent model for the negative-sequence component.

component of the current flowing between the system and the grid. Consequently, the voltage $\underline{V}_{sn}$ is corrected by the negative-sequence voltage drop on the grid impedance. For a certain amplitude I_{sn}, $\underline{V}_{sn}$ reaches minimum value when $\underline{I}_{sn}$ lags $\underline{V}_{gn}$ by φ, which is the line impedance angle.

3. Practical Application

A. Set-up Configuration

Fig. 3 shows a three-phase four-wire grid-interfacing system, which is designed to deliver bidirectional power with distributed sources. It consists of two four-leg inverters, one in parallel and the other in series with the grid. A common DC-link is supplied by distributed sources which output electricity in DC form.

B. Control Scheme

The control of the whole system will not be presented here because only the control of the series inverter has to be modified. The emphasis in this paper is giving an example on how to generate the desired new current

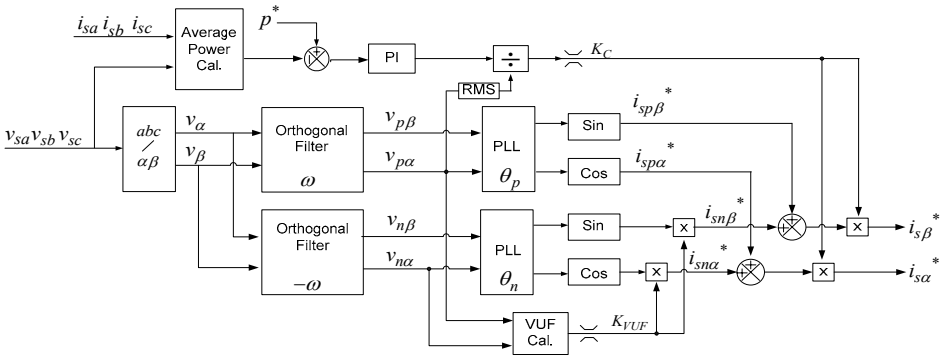

Fig. 4. Block diagram of current reference generation for the series inverter control.

references instead of the original set that only contains fundamental positive-sequence currents. Fig. 4 shows a block diagram of the reference current generation for the series inverter. This control block consists of the separation of sequence voltages, PLL, average power control and the synthesis of signals.

The *VUF* ratio denoted by K_{VUF}, that is the ratio between the amplitude of the negative-sequence voltage and the positive-sequence voltage at the POC, is used to determine the weights of the two sequence currents. In this case, a constraint equation is proposed to calculate the desired amplitude of the negative-sequence current I_{sn}. Therefore, the amplitude ratio of negative-sequence current to positive-sequence current is defined to be proportional to the voltage unbalance, as expressed by

$$\frac{I_{sn}}{I_{sp}} = \frac{V_{sn}}{V_{sp}} = K_{VUF} \,. \qquad (1)$$

The value I_{sp} is the amplitude of the positive-sequence current, which is regulated by the average power control loop. Consequently, I_{sn} is derived from (1) based on the quantity of unbalance voltage at the POC.

4. Experimental Results

For experiment, line impedance parameters are chosen with a 2mH inductance and a 0.628 Ω resistance in each phase. With the proposed negative-sequence voltage correction added, Fig. 5 shows the effect of negative-sequence voltage correction at the POC with a single system module. With the orthogonal filter, they are reproduced in the α-β frame for observation. As seen, the amplitude of the negative-sequence voltage is reduced, although the decrease is limited to 9%. Note that the line impedance parameters are exaggerated here for analysis. In practical utility grid, taking 200uH as an example, then the decrease is around 1% under the same condition.

5. Conclusion

This paper proposes to add negative-sequence voltage correction in distributed grid-interfacing converters. Each system module can help decrease the negative-sequence voltage at the POC by delivering a small amount of negative-sequence current to correct the negative-sequence voltage. Although the amplitude reduction of the negative-sequence voltage is limited by a single module, by using many of these modules, a substantial

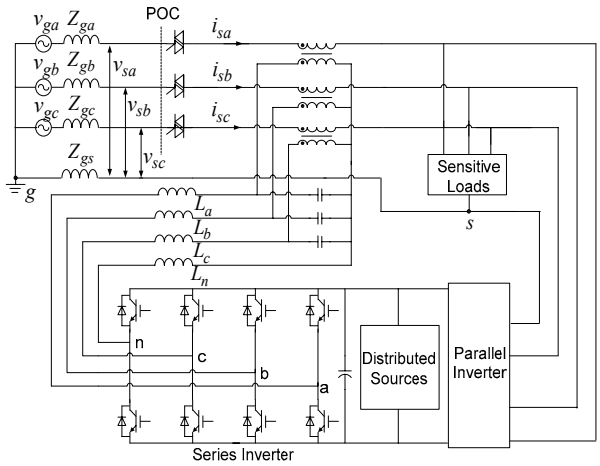

Fig. 3. Three-phase four-wire grid-interfacing system.

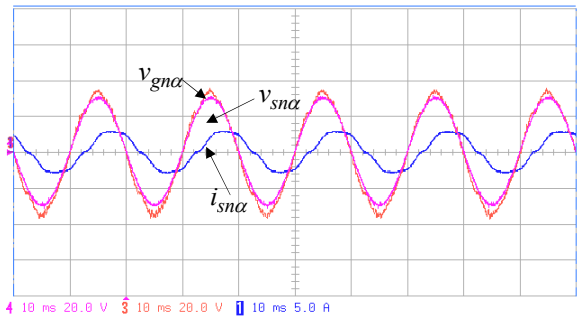

Fig. 5. Experimental results of the negative-sequence voltage correction. The α component of the negative-sequence voltage of the POC Vsnα shows a 9% of amplitude reduction comparing to the negative-sequence voltage of the grid Vgnα. The α component of the negative-sequence current lags the voltage by φ degrees α-β frame (φ = 45°).

improvement is possible, as verified by simulation.

References

[1] Annette von Jouanne and Basudeb (Ben) Banerjee, "Assessment of voltage unbalance," *IEEE Trans. Power Del.*, vol. 16, no. 4, pp. 782-790, Oct. 2001.

[2] Kuang Li, Jinjun Liu, Zhaoan Wang, and Biao Wei, "Strategies and operating point optimization of STATCOM control for voltage unbalance mitigation in three-phase three-wire systems," *IEEE Trans. Power Del.*, vol. 22, no. 1, pp. 413-422, Jan. 2007.

[3] Hideaki Fujita, and H. Akagi, "Voltage-regualtion performance of a shunt active filter intended for installation on a power distribution system," *IEEE Trans. Power Electron.*, vol 22, no.3, pp. 1046 – 1053, May 2007.